TC5M-10-110IC

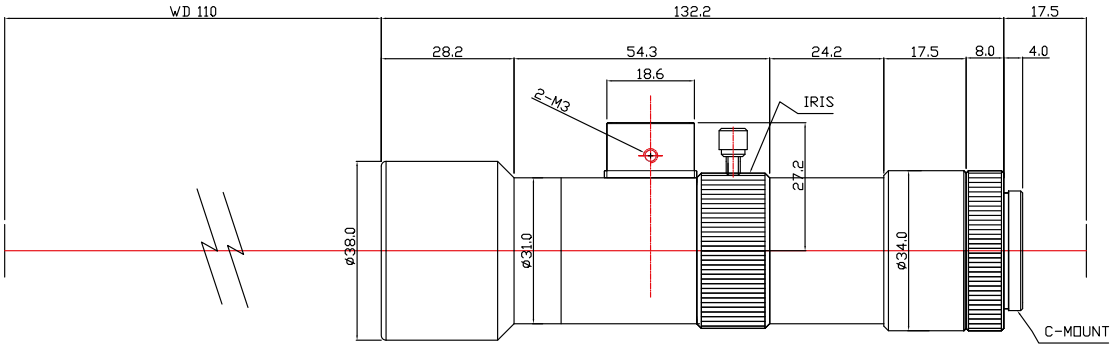

The Object Side Telecentric Lens TC5M-10-110IC is suitable for sensors up to 5 megapixel and with an image format of 2/3 inch.

Technical Data	
Art.Gr.	TEL
Magnification	1 X
Working Distance (WD)	110 mm
Depth of Field (DOF)	260 µm @CoC 20 µm
Resolution (Object Side)	4.36 µm
Image Format (max.)	2/3 inch
Megapixel (max.)	5 MP
Working F-Number	6.5
Numerical Aperture (NA)	0.077
Field of View (FOV)	8.47mm x 7.1mm @ 2/3
Telecentric Type	Object Side
Telecentricity	0.025 °
Optical Distortion (max.)	0.01 %
Mount Type	C-Mount

Applied ISO Standards, if not otherwise noted: ISO 2768-1, -m | focal length f +/- 3%, ISO 10110-7, -11 (default values), ISO 12233 (MTF measurement)

Datasheet created: 2020-08 Specifications subject to change without notice.