TC5M-03-110C

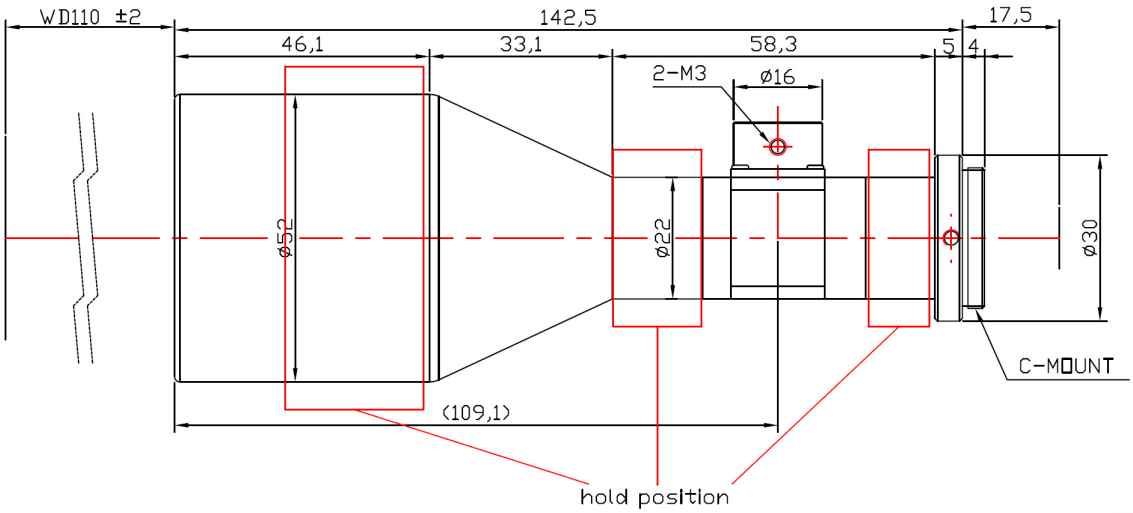

The Object Side Telecentric Lens TC5M-03-110C is suitable for sensors up to 5 megapixel.

Technical Data	
Art.Gr.	TEL
Magnification	0.3 X
Working Distance (WD)	110 mm
Depth of Field (DOF)	3040 µm @CoC 20 µm
Resolution (Object Side)	15.3 µm
Image Format (max.)	2/3 inch
Megapixel (max.)	5 MP
Working F-Number	6.9
Numerical Aperture (NA)	0.0219
Field of View (FOV)	28.2mm x 23.7mm @ 2/3"
Telecentric Type	Object Side
Telecentricity	0.04 °
Optical Distortion (max.)	0.02 %
Mount Type	C-Mount

Applied ISO Standards, if not otherwise noted: ISO 2768-1, -m | focal length f +/- 3%, ISO 10110-7, -11 (default values), ISO 12233 (MTF measurement)

Datasheet created: 2023-05 Specifications subject to change without notice.