TC4MHR-08-130

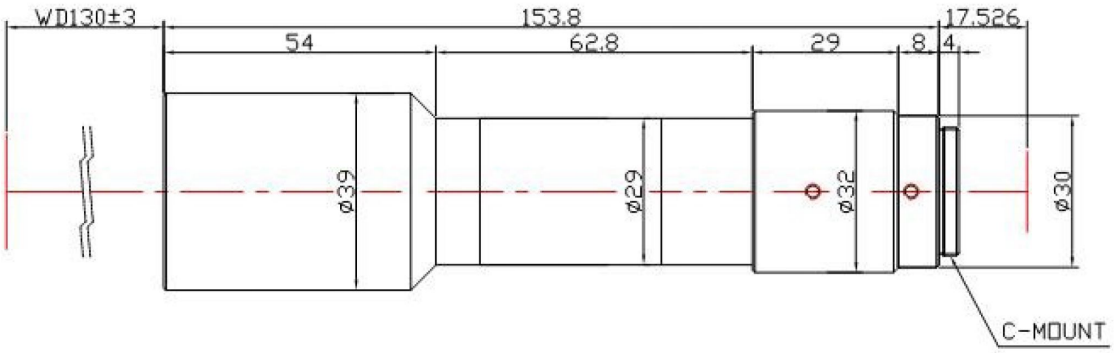

The Object Side Telecentric Lens TC4MHR-08-130 is suitable for sensors up to 4 megapixel.

Technical Data	
Art.Gr.	TEL
Magnification	0.8 X
Working Distance (WD)	130 mm
Depth of Field (DOF)	687 µm @CoC 22 µm
Resolution (Object Side)	8.4 µm
Image Format (max.)	1 inch
Megapixel (max.)	4 MP
Working F-Number	10
Numerical Aperture (NA)	0.04
Field of View (FOV)	14.07mm x 14.07mm
Telecentric Type	Object Side
Telecentricity	0.03 °
Optical Distortion (max.)	0.03 %
Mount Type	C-Mount

Applied ISO Standards, if not otherwise noted: ISO 2768-1, -m | focal length f +/- 3%, ISO 10110-7, -11 (default values), ISO 12233 (MTF measurement)

Datasheet created: 2022-12 Specifications subject to change without notice.