TC4M-10-110C

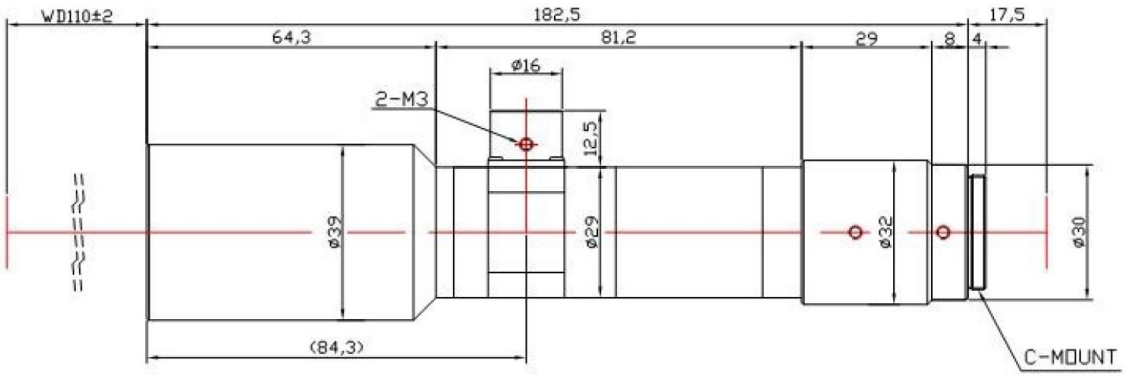

The Object Side Telecentric Lens TC4M-10-110C is suitable for sensors up to 4 megapixel and with an image format of 1 inch.

Technical Data	
Art.Gr.	TEL
Magnification	1 X
Working Distance (WD)	110 mm
Depth of Field (DOF)	352 µm @CoC 22 µm
Resolution (Object Side)	5.4 µm
Image Format (max.)	1 inch
Megapixel (max.)	4 MP
Working F-Number	8
Numerical Aperture (NA)	0.062
Field of View (FOV)	11.26mm x 11.26mm
Telecentric Type	Object Side
Telecentricity	0.03 °
Optical Distortion (max.)	0.03 %
Mount Type	C-Mount

Applied ISO Standards, if not otherwise noted: ISO 2768-1, -m | focal length f +/- 3%, ISO 10110-7, -11 (default values), ISO 12233 (MTF measurement)

Datasheet created: 2020-09 Specifications subject to change without notice.

Lensation GmbH | Unterer Dammweg 12 | 76149 Karlsruhe (Germany) | +49 (0) 721 75 40 45-0 | info@lensation.de | www.lensation.de