Lensagon **C5M1214V2**

LENSATION
smart lenses. smart solutions.

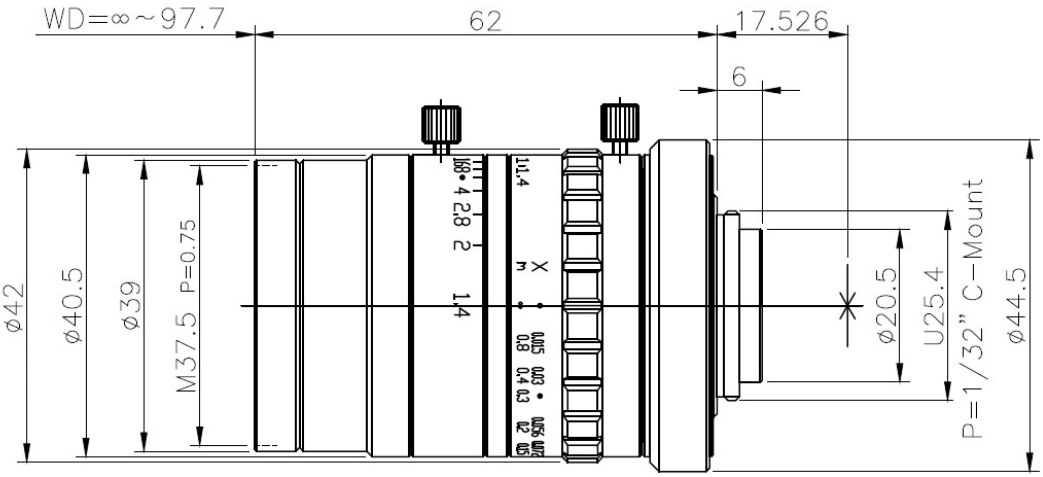

The C-Mount lens Lensagon C5M1214V2 is suitable for common sensors up to 5 megapixel with an image format of 2/3 inch. It is characterized by a particularly high light intensity.

Technical Data	
Mount	C-Mount
Sensor	2/3 inch
Focal Length	12 mm
Aperture	1.4
MOD	0.1 m
Back Focal	17.526 mm
Angle of View	D:49.25° H:39.75° V:30.35°
Megapixel	5 MP
IR Cut Filter	No
TV Distortion	-0.31 %
Image Circle	11 mm
Weight	178.8 g
Iris	manual-lock
Focus	manual-lock
Filter	M37.5 P=0.5
Typ	Standard

BEST VALUE & PERFORMANCE

Light Sensitive

5 Megapixel

Applied ISO Standards, if not otherwise noted: ISO 2768-1, -m | focal length f +/- 3%, ISO 10110-7, -11 (default values), ISO 12233 (MTF measurement)

Datasheet created: 2020-08 Specifications subject to change without notice.

Lensation GmbH | Unterer Dammweg 12 | 76149 Karlsruhe (Germany) | +49 (0) 721 75 40 45-0 | info@lensation.de | www.lensation.de