BF10M10526S132C

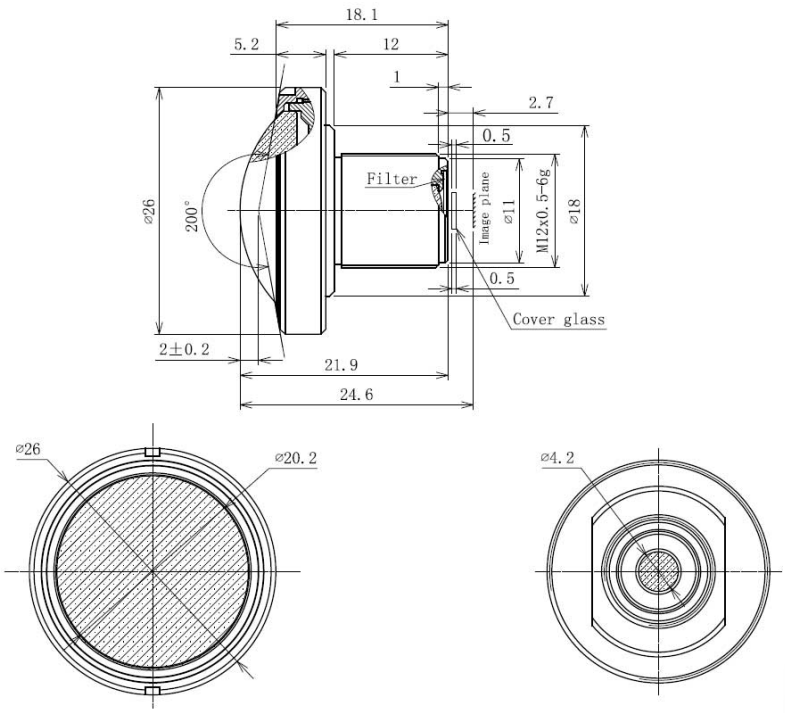

The S-Mount lens Lensagon BF10M10526S132C is suitable for current sensors up to 10.00 megapixel with an image format of 1/3.2 inch.

Technical Data	
Mount	S-Mount
Sensor	1/3.2 inch
Focal Length	1.05 mm
Aperture	2.40
MOD	0.10 m
Back Focal	3.20 mm
Angle of View	D:202.00° H:202.00° V:202.00°
Megapixel	10.00 MP
IR Correction	No
IR Cut Filter	Yes
Image Circle	3.46 mm
Weight	13.80 g
Iris	fixed
Focus	fixed
Chief ray angle	5.20 °
Typ	Fisheye

10 Megapixel

Applied ISO Standards, if not otherwise noted: ISO 2768-1, -m | focal length f +/- 3%, ISO 10110-7, -11 (default values), ISO 12233 (MTF measurement)

Datasheet created: 2024-09 Specifications subject to change without notice.

Lensation GmbH | Unterer Dammweg 12 | 76149 Karlsruhe (Germany) | +49 (0) 721 75 40 45-0 | info@lensation.de | www.lensation.de